SILCA NEWS 05/18

ALL THE NEW KEYS, AUTOMOTIVE SOLUTIONS, KEY CUTTING MACHINES, SOFTWARE UPDATES AND MUCH MORE

Contents

New Keys	1
Vehicle Keys Guide	2-3-4-5
Silca T80+ Solution	6
New Engraving Kit for Futura and Futura Pro	7
New Key Cutting Machine Catalogue	8
SKP 2/2018 Update	9-10-11
ADS258 Fiat® 2014 Software	12-13-14
ADS231 Fiat® 2015 Software	15-16
Key Cutting Machine Accessories	17-18-19

T80+ Solution

New Engraving Kit for Futura and Futura Pro

KEY CUTTING MACHINE CATALOGUE

EDITION **MAY 2018**

Copyright by Silca S.p.A. 2018 - All Rights Reserved

SILCA NEWS 05/2018

NEW KEYS

New Keys / Chiavi Nuove / Neue Schlüssel / Nouvelles Clés / Llaves Nuevas / Chaves Nuevas

FOR:
PER:

ASEC SECURITY

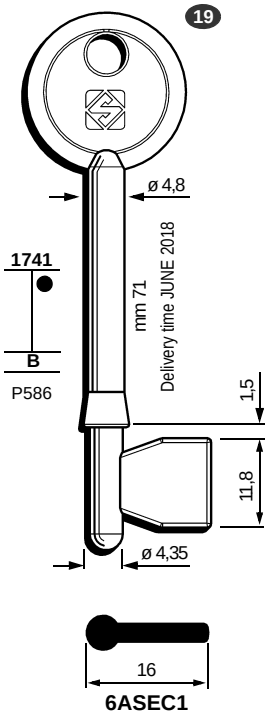

NEIMAN

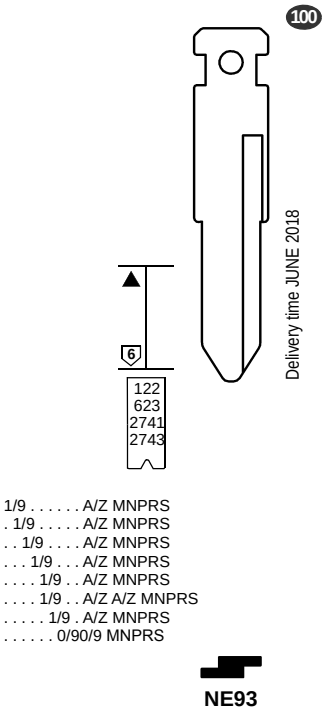

FOR:
PER:

TRELOCK

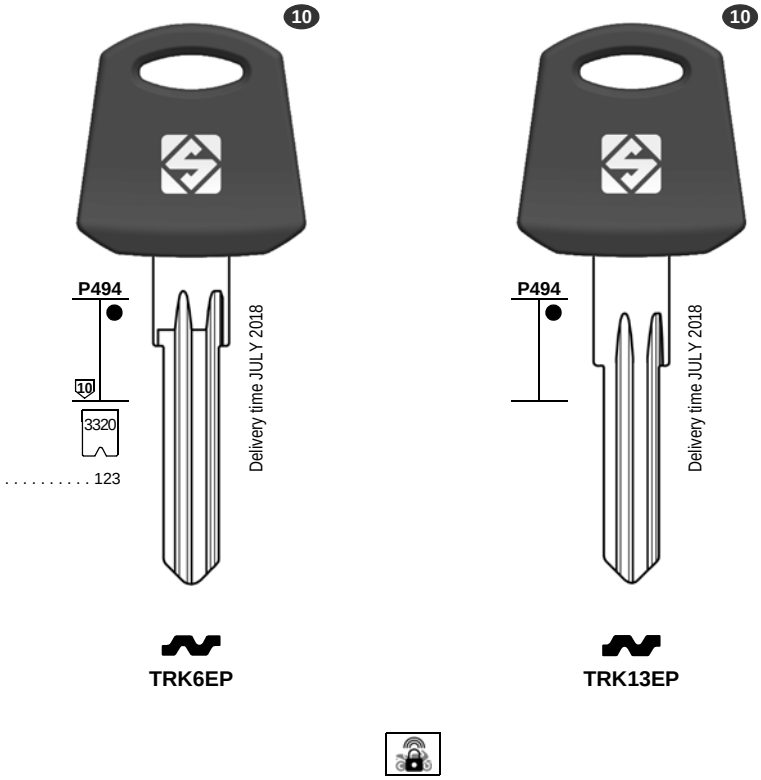

FOR / PER
ASEC SECURITY (GB)
NEIMAN (DE, FR)
TRELOCK (DE)

01
COMMERCIAL GROUP
GRUPPO COMMERCIALE
PREISEGRUPPE
GROUPE COMMERCIAL
GRUPO COMMERCIAL
GRUPO COMERCIAL

www.silca.biz

ALL THE KEYS DISPLAYED ARE AVAILABLE ALSO IN THE SILCA **"NEW KEY COLLECTION"**

Copyright by Silca S.p.A. 2018 - All Rights Reserved

Car Keys Guide / Guida Chiavi Auto / Handbuch für Autoschlüssel / Guide Clés pour Voitures Guía Llaves para Coches / Guia Chaves para Carros

New Updates

1	2	2a	3	3a	3b	E3 / E4 / E5			6	42+71	72	43 44a
						TRANSPONDER INFO			IGNITION			
CAR MAKE MODEL	FROM	TO	SILCA REF.	SILCA REF.	SILCA REF.	TRANSP. COPY	TRANSP. PROGR.	TRP SETTING	TRANSP. TYPE	FAST COPY PLUS RW4 PLUS FAST COPY / RW4	FAST COPY PLUS RW4 PLUS	FAST COPY RW4 + P-BOX/M-BOX
			SILCA REF.	SILCA TE	SILCA FLIP					ID	COPY	COPY
For more info on the uses of car keys, refer to the Silca Electronic Key Catalogue:												
FORD® AUSTRALIA												
EVEREST	2015								PH / CR3	47		
FALCON	2011			**HU101TE**	**HU101FH**		T41/T41+	6F-63 (T80)	TEX / 80	6E-63		
FALCON	2011		**HU101TE**	**HU101TE**	**HU101FH**	T80+			TEX / 80	6E-63	M-BOX	
FIESTA	2013			**HU101TE**	**HU101FH**		T41/T41+	6F-63 (T80)	TEX / 80	6E-63		
FIESTA	2013		**HU101TE**	**HU101TE**	**HU101FH**	T80+			TEX / 80	6E-63	M-BOX	
FOCUS	2011	2016		**HU101TE**	**HU101FH**		T41/T41+	6F-63 (T80)	TEX / 80	6E-63		
FOCUS	2011	2016	**HU101TE**	**HU101TE**	**HU101FH**	T80+			TEX / 80	6E-63	M-BOX	
KUGA	2012	2016		**HU101TE**	**HU101FH**		T41/T41+	6F-63 (T80)	TEX / 80	6E-63		
KUGA	2012	2016	**HU101TE**	**HU101TE**	**HU101FH**	T80+			TEX / 80	6E-63	M-BOX	
MONDEO	2010	2015		**HU101TE**	**HU101FH**		T41/T41+	6F-63 (T80)	TEX / 80	6E-63		
MONDEO	2010	2015	**HU101TE**	**HU101TE**	**HU101FH**	T80+			TEX / 80	6E-63	M-BOX	
MONDEO	2015								PH / CR3	47		
RANGER	2011	2015	**HU101TE**	**HU101TE**	**HU101FH**	T80+			TEX / 80	6E-63	M-BOX	
RANGER	2015								PH / CR3	47		
FORD® EUROPA												
B-MAX	2012		**HU101TE**	**HU101TE**	**HU101FH**	T80+			TEX / 80	6E-63	M-BOX	
C-MAX	2011		**HU101TE**	**HU101TE**	**HU101FH**	T80+			TEX / 80	6E-63	M-BOX	
ECOSPORT	2013		**HU101TE**	**HU101TE**	**HU101FH**	T80+			TEX / 80	6E-63	M-BOX	
EDGE	2011	2013	**HU101TE**	**HU101TE**	**HU101FH**	T80+			TEX / 80	6E-63	M-BOX	
FIESTA	2013	2017	**HU101TE**	**HU100TE**	**HU101FH**	T80+			TEX / 80	6E-63	M-BOX	
FOCUS	2011		**HU101TE**	**HU101TE**	**HU101FH**	T80+			TEX / 80	6E-63	M-BOX	
GALAXY	2010	2014	**HU101TE**	**HU101TE**	**HU101FH**	T80+			TEX / 80	6E-63	M-BOX	
KUGA	2012	2015	**HU101TE**	**HU101TE**	**HU101FH**	T80+			TEX / 80	6E-63	M-BOX	
MONDEO	2011	2014	**HU101TE**	**HU101TE**	**HU101FH**	T80+			TEX / 80	6E-63	M-BOX	
RANGER	2012		**HU101TE**	**HU101TE**	**HU101FH**	T80+			TEX / 80	6E-63	M-BOX	
S-MAX	2010	2014	**HU101TE**	**HU101TE**	**HU101FH**	T80+			TEX / 80	6E-63	M-BOX	
TOURNEO CONNECT	2013		**HU101TE**	**HU101TE**	**HU101FH**	T80+			TEX / 80	6E-63	M-BOX	
TOURNEO COURIER	2012		**HU101TE**	**HU101TE**	**HU101FH**	T80+			TEX / 80	6E-63	M-BOX	
TOURNEO CUSTOM	2013		**HU101TE**	**HU101TE**	**HU101FH**	T80+			TEX / 80	6E-63	M-BOX	
TRANSIT CONNECT	2013		**HU101TE**	**HU101TE**	**HU101FH**	T80+			TEX / 80	6E-63	M-BOX	
TRANSIT COURIER	2012		**HU101TE**	**HU101TE**	**HU101FH**	T80+			TEX / 80	6E-63	M-BOX	
TRANSIT CUSTOM	2012		**HU101TE**	**HU101TE**	**HU101FH**	T80+			TEX / 80	6E-63	M-BOX	
TRANSIT	2013		**HU101TE**	**HU101TE**	**HU101FH**	T80+			TEX / 80	6E-63	M-BOX	

® Registered Trademarks. / ® Marchi Registrati. / ® Eingetragene Marken. / ® Marques Déposées. / ® Marcas Registradas. / ® Marcas Registradas.

Copyright by Silca S.p.A. 2018 - All Rights Reserved

Car Keys Guide / Guida Chiavi Auto / Handbuch für Autoschlüssel / Guide Clés pour Voitures Guía Llaves para Coches / Guia Chaves para Carros

New Updates

1	2	2a	3	3a	3b	E3 / E4 / E5			6	42+71	72	43 44a
						TRANSPONDER INFO			IGNITION			
CAR MAKE MODEL	FROM	TO	SILCA REF.	SILCA REF.	SILCA REF.	TRANSP. COPY	TRANSP. PROGR.	TRP SETTING	TRANSP. TYPE	FAST COPY PLUS RW4 PLUS FAST COPY / RW4	FAST COPY PLUS RW4 PLUS	FAST COPY RW4 + P-BOX/M-BOX
			SILCA REF.	SILCA TE	SILCA FLIP					ID	COPY	COPY
For more info on the uses of car keys, refer to the Silca Electronic Key Catalogue:												
FORD® SOUTH AMERICA												
ECOSPORT	2012		**HU101TE**	**HU101TE**	**HU101FH**	T80+			TEX / 80	6E-63	M-BOX	
FORD® USA												
C-MAX	2013		**HU101TE**	**HU101TE**	**HU101FH**	T80+			TEX / 80	6E-63	M-BOX	
EDGE	2011	2015	**FO38RTE**	**FO38RTE**	**FO38RFH**	T80+			TEX / 80	6E-63	M-BOX	
ESCAPE	2012		**HU101TE**	**HU101TE**	**HU101FH**	T80+			TEX / 80	6E-63	M-BOX	
E-SERIES VAN	2013		**FO38RTE**	**FO38RTE**	**FO38RFH**	T80+			TEX / 80	6E-63	M-BOX	
EXPEDITION	2011	2017	**FO38RTE**	**FO38RTE**	**FO38RFH**	T80+			TEX / 80	6E-63	M-BOX	
EXPEDITION	2018								PH / CR3	47		
EXPLORER	2011	2015	**FO38RTE**	**FO38RTE**	**FO38RFH**	T80+			TEX / 80	6E-63	M-BOX	
F-150	2011	2014	**FO38RTE**	**FO38RTE**	**FO38RFH**	T80+			TEX / 80	6E-63	M-BOX	
F-250	2011	2016	**FO38RTE**	**FO38RTE**	**FO38RFH**	T80+			TEX / 80	6E-63	M-BOX	
F-350	2011	2016	**FO38RTE**	**FO38RTE**	**FO38RFH**	T80+			TEX / 80	6E-63	M-BOX	
F-450	2011	2016	**FO38RTE**	**FO38RTE**	**FO38RFH**	T80+			TEX / 80	6E-63	M-BOX	
FIESTA	2011		**HU101TE**	**HU101TE**	**HU101FH**	T80+			TEX / 80	6E-63	M-BOX	
FLEX	2011		**FO38RTE**	**FO38RTE**	**FO38RFH**	T80+			TEX / 80	6E-63	M-BOX	
FOCUS	2011	2011	**FO38RTE**	**FO38RTE**	**FO38RFH**	T80+			TEX / 80	6E-63	M-BOX	
FOCUS	2012		**HU101TE**	**HU101TE**	**HU101FH**	T80+			TEX / 80	6E-63	M-BOX	
FUSION	2011	2012	**FO38RTE**	**FO38RTE**	**FO38RFH**	T80+			TEX / 80	6E-63	M-BOX	
MUSTANG	2011	2014	**FO38RTE**	**FO38RTE**	**FO38RFH**	T80+			TEX / 80	6E-63	M-BOX	
RANGER	2011	2012	**FO38RTE**	**FO38RTE**	**FO38RFH**	T80+			TEX / 80	6E-63	M-BOX	
TAURUS	2011		**FO38RTE**	**FO38RTE**	**FO38RFH**	T80+			TEX / 80	6E-63	M-BOX	
TRANSIT CONNECT	2014		**HU101TE**	**HU101TE**	**HU101FH**	T80+			TEX / 80	6E-63	M-BOX	
TRANSIT	2013		**HU101TE**	**HU101TE**	**HU101FH**	T80+			TEX / 80	6E-63	M-BOX	
HYUNDAI®												
CRETA	2014			**HYN14RTE**	**HYN14RFH**		T39		TEX / 80	6E-60		
CRETA	2014		**HYN14RTE**	**HYN14RTE**	**HYN14RFH**	T80+			TEX / 80	6E-60	M-BOX	
ELANTRA GT (CANADA)	2013	2017		**HYN17BTE**			T39		TEX / 80	6E-60		
ELANTRA GT (CANADA)	2013	2017	**HYN17BTE**	**HYN17BTE**		T80+			TEX / 80	6E-60	M-BOX	
EON (INDIA)	2010			**HYN14TE**	**HYN14FH**		T39		TEX / 80	6E-60		
EON (INDIA)	2010		**HYN14TE**	**HYN14TE**	**HYN14FH**	T80+			TEX / 80	6E-60	M-BOX	
HB20 (BRAZIL)	2012			**HYN14RTE**	**HYN14RFH**		T39		TEX / 80	6E-60		
HB20 (BRAZIL)	2012		**HYN14RTE**	**HYN14RTE**	**HYN14RFH**	T80+			TEX / 80	6E-60	M-BOX	
I30	2012		**TOY49TE**	**TOY49TE**	**TOY49FH**	T80+			TEX / 80	6E-60	M-BOX	

® Registered Trademarks. / ® Marchi Registrati. / ® Eingetragene Marken. / ® Marques Déposées. / ® Marcas Registradas. / ® Marcas Registradas.

Copyright by Silca S.p.A. 2018 - All Rights Reserved

Car Keys Guide / Guida Chiavi Auto / Handbuch für Autoschlüssel / Guide Clés pour Voitures Guía Llaves para Coches / Guia Chaves para Carros

New Updates

1	2	2a	3	3a	3b	E3 / E4 / E5			6	42+71	72	43 44a
						TRANSPONDER INFO			IGNITION			
CAR MAKE MODEL	FROM	TO	SILCA REF.	SILCA REF.	SILCA REF.	TRANSP. COPY	TRANSP. PROGR.	TRP SETTING	TRANSP. TYPE	FAST COPY PLUS RW4 PLUS FAST COPY / RW4	FAST COPY PLUS RW4 PLUS	FAST COPY RW4 + P-BOX/M-BOX
			SILCA REF.	SILCA TE	SILCA FLIP					ID	COPY	COPY
For more info on the uses of car keys, refer to the Silca Electronic Key Catalogue:												
HYUNDAI®												
I40	2011		**TOY49TE**	**TOY49TE**	**TOY49FH**	T80+			TEX / 80	6E-60	M-BOX	
IX20	2012		**TOY49TE**	**TOY49TE**	**TOY49FH**	T80+			TEX / 80	6E-60	M-BOX	
SANTA FE	2013		**HYN17RBTE**	**HYN17RBTE**		T80+			TEX / 80	6E-60	M-BOX	
SONATA	2015			**TOY49TE**	**TOY49FH**		T39		TEX / 80	6E-60		
SONATA	2015		**TOY49TE**	**TOY49TE**	**TOY49FH**	T80+			TEX / 80	6E-60	M-BOX	
TUCSON	2015		**TOY49TE**	**TOY49TE**	**TOY49FH**	T80+			TEX / 80	6E-60	M-BOX	
VELOSTER	2010		**HYN17BTE**	**HYN17BTE**		T80+			TEX / 80	6E-60	M-BOX	
KIA®												
CARENS	2013		**SMART KEY**						PH / CR2	46		
CARENS	2013		**TOY49TE**	**TOY49TE**	**TOY49FH**	T80+			TEX / 80	6E-60	M-BOX	
CARNIVAL	2014			**HYN14TE**	**HYN14TE**		T39		TEX / 80	6E-60		
CARNIVAL	2014		**HYN14TE**	**HYN14TE**	**HYN14FH**	T80+			TEX / 80	6E-60	M-BOX	
CEED	2012		**TOY49TE**	**TOY49TE**	**TOY49FH**	T80+			TEX / 80	6E-60	M-BOX	
CERATO	2013			**HYN14RTE**	**HYN14RFH**		T39		TEX / 80	6E-60		
CERATO	2013		**HYN14RTE**	**HYN14RTE**	**HYN14RFH**	T80+			TEX / 80	6E-60	M-BOX	
FORTE (CANADA)	2014			**HYN14RTE**	**HYN14RFH**		T39		TEX / 80	6E-60		
FORTE (CANADA)	2014		**HYN14RTE**	**HYN14RTE**	**HYN14RFH**	T80+			TEX / 80	6E-60	M-BOX	
MORNING	2011		**HYN17T**						TEX / 80	6E-60		
MORNING	2011			**HYN17BTE**			T39		TEX / 80	6E-60		
MORNING	2011		**SMART KEY**						PH / CR2	46		
MORNING	2011		**HYN17BTE**	**HYN17BTE**		T80+			TEX / 80	6E-60	M-BOX	
PICANTO	2011		**HYN17BTE**	**HYN17BTE**		T80+			TEX / 80	6E-60	M-BOX	
RIO (CANADA)	2012	2017	**TOY49TE**	**TOY49TE**	**TOY49FH**	T80+			TEX / 80	6E-60	M-BOX	
RIO	2012	2017	**SMART KEY**						PH / CR2	46		
RIO	2012	2017	**TOY49TE**	**TOY49TE**	**TOY49FH**	T80+			TEX / 80	6E-60	M-BOX	
RONDO	2013		**TOY49TE**	**TOY49TE**	**TOY49FH**	T80+			TEX / 80	6E-60	M-BOX	
SORENTO	2015			**HYN17RBTE**			T39		TEX / 80	6E-60		
SORENTO	2015		**HYN17RBTE**	**HYN17RBTE**		T80+			TEX / 80	6E-60	M-BOX	
SOUL	2014		**SMART KEY**						TEX / AES	7A		
SOUL	2014		**TOY49TE**	**TOY49TE**	**TOY49TE**	T80+			TEX / 80	6E-60	M-BOX	
SPORTAGE	2015			**TOY49TE**	**TOY49FH**		T39		TEX / 80	6E-60		
SPORTAGE	2015		**TOY49TE**	**TOY49TE**	**TOY49FH**	T80+			TEX / 80	6E-60	M-BOX	

® Registered Trademarks. / ® Marchi Registrati. / ® Eingetragene Marken. / ® Marques Déposées. / ® Marcas Registradas. / ® Marcas Registradas.

Copyright by Silca S.p.A. 2018 - All Rights Reserved

Car Keys Guide / Guida Chiavi Auto / Handbuch für Autoschlüssel / Guide Clés pour Voitures Guía Llaves para Coches / Guia Chaves para Carros

New Updates

1	2	2a	3	3a	3b	E3 / E4 / E5			6	42+71	72	43 44a
						TRANSPONDER INFO			IGNITION			
CAR MAKE MODEL	FROM	TO	SILCA REF.	SILCA REF.	SILCA REF.	TRANSP. COPY	TRANSP. PROGR.	TRP SETTING	TRANSP. TYPE	FAST COPY PLUS RW4 PLUS FAST COPY / RW4	FAST COPY PLUS RW4 PLUS	FAST COPY RW4 + P-BOX/M-BOX
			SILCA REF.	SILCA TE	SILCA FLIP					ID	COPY	COPY
For more info on the uses of car keys, refer to the Silca Electronic Key Catalogue:												
LINCOLN												
MARK LT	2011	2014	**FO38RTE**	**FO38RTE**	**FO38RFH**	T80+			TEX / 80	6E-63	M-BOX	
MKT	2010	2011	**FO38RTE**	**FO38RTE**	**FO38RFH**	T80+			TEX / 80	6E-63	M-BOX	
MKX	2011	2013	**FO38RTE**	**FO38RTE**	**FO38RFH**	T80+			TEX / 80	6E-63	M-BOX	
MKZ	2011	2017	**FO38RTE**	**FO38RTE**	**FO38RFH**	T80+			TEX / 80	6E-63	M-BOX	
NAVIGATOR	2009	2017	**FO38RTE**	**FO38RTE**	**FO38RFH**	T80+			TEX / 80	6E-63	M-BOX	
MAZDA®												
BT-50	2011		**HU101TE**	**HU101TE**	**HU101FH**	T80+			TEX / 80	6E-63	M-BOX	
PEUGEOT®												
SOME MODELS	1999		**NE93**									
RENAULT®												
SOME MODELS	1999		**NE93**									
TOYOTA®												
C-HR	2016		**SMART KEY**						TEX / AES	7A		
VPG®												
MV-1	2012	2014	**FO38RTE**	**FO38RTE**	**FO38RFH**	T80+			TEX / 80	6E-63	M-BOX	

See also the "Vehicle Guide Legend" / Vedi anche la "Legenda Guida Veicoli" / Siehe auch die "Fahrzeugschlüssel Erläuterung" / Voir aussi la "Légende Guide Véhicules" / Véase también la "Leyenda Guía para Vehículos"/ Veja também a "Legenda Guia para Véiculos"

The uses of the keys are purely indicative and may be subject to updates and revisions. / Gli utilizzi delle chiavi sono da considerarsi puramente indicativi e possono essere oggetto di aggiornamenti e revisioni. / Die Abbildung und technischen Daten der Schlüssel sind nicht bindend. Silca behält sich Änderungen am Produkt, die zur Verbesserung beitragen, vor. / Les usages des clés sont purement indicatifs; ils peuvent être mis àjour et revus. / Los usos de las llaves deben considerarse puramente indicativos y pueden ser objeto de actualizaciones y revisiones. / As utilizações das chaves devem ser consideradas puramente indicativas e podem ser objecto de actualizações e revisões.

® Registered Trademarks. / ® Marchi Registrati. / ® Eingetragene Marken. / ® Marques Déposées. / ® Marcas Registradas. / ® Marcas Registradas.

Copyright by Silca S.p.A. 2018 - All Rights Reserved

Silca T80+ Solution

The cloning solution for Texas® 80 bit transponders

Silca T80+ is the unique solution for cloning transponders for many of the most sold Ford®, Toyota®, Hyundai® and Kia® models worldwide. The Silca T80+ solution also pre-sets 80 bit transponders for Subaru® vehicles ready for programming with a diagnostic device.
The solution is available with a simple software update of the RW4 Plus and Fast Copy Plus devices to the 04.06.091 version. The new transponder T80+ and the M-Box are also needed. In total around 97% of all vehicles using 80 bit transponders can be cloned.

La soluzione per la clonazione di transponder Texas® 80 bit

Silca T80+ è l'unica soluzione per la clonazione dei transponder utilizzati sui modelli Ford®, Toyota®, Hyundai® e Kia® più venduti al mondo. Silca T80+ consente inoltre di pre-settare i transponder 80 bit per veicoli Subaru® destinati alla programmazione con dispositivo diagnostico.
La soluzione è disponibile con un semplice aggiornamento software dei dispositivi di clonazione RW4 Plus e Fast Copy Plus (versione 04.06.091). È necessario utilizzare anche il transponder T80+ ed M-Box. Con la soluzione Silca T80+ è possibile clonare il 97% circa dei veicoli che utilizzano transponder 80 bit.

Die Lösung für das Kopieren von Texas® 80 Bit-Transpondern

Silca T80+ ist die einzige Lösung für das Kopieren von Transpondern, die in den meistverkauften Modellen der Marken Ford®, Toyota®, Hyundai® und Kia® benutzt werden, und bietet die Möglichkeit der Voreinstellung der 80 Bit-Transponder für Subaru®-Fahrzeuge, die mit einem Diagnosegerät programmiert werden sollen.
Die Lösung ist mit einem einfachen Software-Update der Kopiergeräte RW4 Plus und Fast Copy Plus (Version 04.06.091) erhältlich. Auch der neue Transponder T80+ und die M-Box müssen benutzt werden. Mit der Lösung Silca T80+ können rund 97% der Fahrzeugschlüssel kopiert werden, die 80 Bit-Transponder verwenden.

La solution dédiée au clonage de transpondeurs Texas® 80 bits

Silca T80+ est l'unique solution pour cloner des transpondeurs utilisés sur les modèles Ford®, Toyota®, Hyundai® et Kia® les plus vendus dans le monde. La solution Silca T80+ permet en outre de prérégler les transpondeurs 80 bits pour véhicules Subaru® destinés à la programmation avec un dispositif de diagnostic.
La solution est disponible avec une simple mise à jour du logiciel des dispositifs de clonage RW4 Plus et Fast Copy Plus (version 04.06.091). Il faut également utiliser le nouveau transpondeur T80+ et M-Box. La solution Silca T80+ permet de cloner 97% environ des véhicules utilisant le transpondeur 80 bits.

La solución para la clonación de transponder Texas® 80 bit

Silca T80+ es la única solución para la clonación de los transponders usados en los modelos Ford®, Toyota®, Hyundai® y Kia® más vendidos en el mundo. Asimismo, lSilca T80+ permite preajustar los transponders 80 bit para los vehículos Subaru®, destinados a la programación con un dispositivo de diagnosis.
La solución está disponible con una simple actualización del software de los dispositivos de clonación RW4 Plus y Fast Copy Plus (versión 04.06.091). Se ha de usar también el nuevo transponder T80+ y M-Box. La solución Silca T80+ permite clonar aproximadamente el 97% de los transponders 80 bit usados en los vehículos.

A solução dedicada à clonagem de Texas® 80 bit

Silca T80+ é a única solução para a clonagem dos transponders utilizados nos modelos Ford®, Toyota®, Hyundai® e Kia® mais vendidos no mundo. A solução Silca T80+ também permite pré-ajustar os transponders 80 bit para veículos Subaru® destinados à programação com dispositivo diagnóstico.
A solução está disponível com uma simples atualização software dos dispositivos de clonagem RW4 Plus e Fast Copy Plus (versão 04.06.091). É necessário utilizar também o transponder T80+ e M-Box. Com a solução Silca T80+ é possível clonar aproximadamente 97% dos veículos que utilizam transponder 80 bit.

> More info on all Silca websites

Copyright by Silca S.p.A. 2018 - All Rights Reserved

New Engraving Kit for Futura and Futura Pro

New Engraving Kit

Discover the new Engraving Kit, a set of accessories dedicated to engraving, compatible with all the Futura and Futura Pro key machines.
The kit, which included the 01E and 02E jaws and the 18DW cutter, has now been enriched with the plane 4 adapter, allowing you to engrave a wide range of metal keys, small medals and plates thanks to the 4 areas (or planes) for installing items of different dimensions.
The software is free and already installed in the Futura/Futura Pro app.

Neues Engraving Kit

Entdecken Sie das neue Engraving Kit: ein Zubehör-Set für die Gravur, das mit allen Modellen der Familie Futura und Futura Pro kompatibel ist.
Das Kit enthält die Spannbacken 01E und 02E und den Fräser 18DW, und wurde jetzt mit dem Adapter für die Ebene 4 erweitert.
Das Kit ermöglicht das leichte Einspannen einer großen Vielfalt an Schlüsseln, Medaillen und Metallplaketten, dank der vier verschiedenen Gravurbereiche (oder -ebenen).
Die Software wird kostenlos geliefert und ist in der Futura/Futura Pro-App schon installiert.

Nuevo Kit Engraving

Descubra el nuevo Kit Engraving, un juego de accesorios, dedicados al grabado compatible con todos los modelos de Futura y Futura Pro.
El Kit, que incluía las quijadas 01E y 02E y la fresa 18DW, se ha ahora enriquecido con el adaptador superificie 4, lo que facilita la instalación de una amplia variedad de llaves, medallas y placas metálicas mediante la predisposición de cuatro áreas distintas (o superficies) de grabado.
El componente software se suministra gratis e instalado en la app de Futura/ Futura Pro.

Nuovo Kit Engraving

Scopri il nuovo Kit Engraving, un set di accessori dedicati all'incisione compatibile con tutti i modelli delle famiglie Futura e Futura Pro.
Il kit, che comprendeva le ganasce 01E e 02E e il fresino 18DW, è stato ora arricchito con l'adattatore sede 4, consentendoti di installare un'ampia gamma di chiavi, medaglie e targhette metalliche grazie alla predisposizione di quattro diverse aree (o sedi) di incisione.
Il software è fornito gratuitamente ed è già installato nella app di Futura/Futura Pro.

Nouveau Kit Engraving

Découvrez le nouveau Kit Engraving, un jeu d'accessoires dédié à la gravure compatible avec tous les modèles de Futura et Futura Pro.
Le kit, qui contenait les mâchoires 01E et 02E et la fraise 18DW, a été maintenant enrichi avec l'adaptateur niveau 4, ce qui vous permet d'installer facilement une vaste variété de clés, médailles et plaquettes métalliques par ses quatre zones (ou niveaux) différentes de gravure.
La partie logiciel est fournie gratuitement et est déjà installée dans l'app Futura/Futura Pro.

Novo Kit Engraving

Descubra o novo Kit Engraving, um conjunto de acessórios dedicados à gravação, compatível com todos os modelos de Futura e Futura Pro.
O Kit, que incluía as garras 01E e 02E e a fresa 18DW, foi agora enriquecido com o adaptador plano 4, facilitando a instalação de uma ampla variedade de chaves, medalhas e plaquetas metálicas, graças à presença de quatro diferentes áreas (ou planos) de gravação.
A componente software é fornecida gratuitamente e já está instalada na app de Futura/Futura Pro.

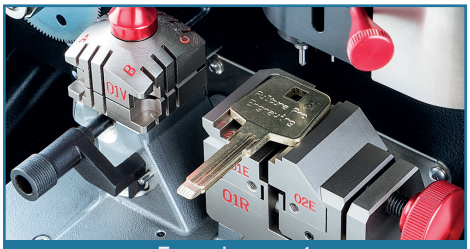

Engraving area 1

Engraving area 2

Engraving area 3

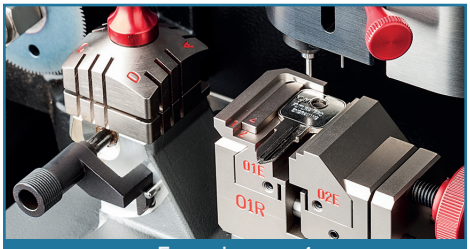

Engraving area 4

> More info on all Silca websites

Copyright by Silca S.p.A. 2018 - All Rights Reserved

KEY CUTTING MACHINE CATALOGUE

THE KEY CUTTING MACHINE MOST SUITABLE FOR YOU

This catalogue presents every key cutting machine, both mechanical and electronic, in a standard, easy to read format that gives the machine's key technical and functional characteristics to help you to choose the machine best suited to your needs.

For each machine, in addition to the technical characteristics, the main accessories are also detailed.

The comprehensive final summary table also allows you to see the whole range, across model families, by the types of keys cut.

LA DUPLICATRICE PIÙ ADATTA A TE

Questo catalogo, completamente rinnovato, presenta ogni duplicatrice, sia meccanica che elettronica, attraverso schede tecniche pensate per chi desidera identificare con sicurezza, e sulla base di parametri tecnici e funzionali, il modello più adatto alle tue esigenze.

Di ogni modello vengono presentate le caratteristiche essenziali, i plus funzionali ed i principali accessori.

Una sezione comparativa riassuntiva ti permette inoltre di confrontare tutte le duplicatrici in gamma per tipologia di chiave cifrata.

DIE PASSENDE KOPIERMASCHINE FÜR DICH

Dieser vollkommen überarbeitete Katalog präsentiert jede mechanische und elektronische Schlüsselkopiermaschine anhand technischer Datenblätter, die so konzipiert wurden, dass du das für deine Bedürfnisse optimal passende Modell entsprechend den technischen und funktionalen Kriterien sicher erkennen kannst.

Ein zusammenfassender Vergleich bietet ferner die Möglichkeit eines Vergleichs aller Schlüsselkopiermaschinen des Sortiments nach zu fräsender Schlüsselart.

LA MACHINE À REPRODUIRE LES CLÉS VOUS CONVENANT LE MIEUX

Ce catalogue, entièrement rénové, présente chaque machine à reproduire les clés, qu'elle soit mécanique ou électronique, à travers des fiches techniques pensées pour ceux qui désirent identifier avec certitude, et sur la base de paramètres techniques et fonctionnels, le modèle répondant le mieux à leurs exigences.

Une section comparative récapitulative vous permettra d'autre part de comparer toutes les machines à reproduire les clés de la gamme par type de clé chiffrée.

LA DUPLICADORA MÁS IDÓNEA PARA TI

Este catálogo, completamente renovado, presenta cada duplicadora, mecánica o electrónica, usando fichas técnicas, pensadas para identificar el modelo más idóneo para ti, de una forma segura y en función de parámetros técnicos y funcionales.

Se presentan las características esenciales, los pluses funcionales y los principales accesorios de cada modelo.

Asimismo, una sección comparativa sintética te permite comparar todas las duplicadoras de la gama por tipología de llave cortada.

A MÁQUINA DUPLICADORA MAIS INDICADA PARA SI

Este catálogo, completamente renovado, apresenta cada máquina duplicadora, quer mecânica quer electrónica, através de fichas técnicas pensadas para quem desejar identificar com segurança, e com base em parâmetros técnicos e funcionais, o modelo mais indicado para as suas exigências.

De cada modelo são apresentadas as características essenciais, os plus funcionais e os acessórios principais.

Uma secção comparativa recapitulativa permite também comparar todas as máquinas duplicadoras da gama pelo tipo de chave cortada.

> Download the Catalogue on Silca website

Copyright by Silca S.p.A. 2018 - All Rights Reserved

Update 2/2018 - SKP Vers. 21.9.x.xx

UPDATE 2/2018

New SKP 2/2018 Update for all WEB and DVD subscribers available in the "News" section of Silca Key Programs. New items include:

- Starting from version 04.06.091, RW4 Plus and Fastcopy Plus devices, in combination with the M-BOX module, can copy TEX-80 Texas® Crypto 80 bit transponders used on Ford®, Hyundai® and Kia® vehicles, onto the new T80+ transponder.

AGGIORNAMENTO 2/2018

Nuovo Aggiornamento SKP 2/2018 per tutti gli abbonati WEB e DVD consultabile nella sezione "Novità" di Silca Key Programs. Tra le novità:

- A partire dalla versione 04.06.091, i dispositivi RW4 Plus e Fastcopy Plus, in abbinamento al modulo M-BOX, sono in grado di eseguire la copia dei transponder TEX-80 Texas® Crypto 80 bits usati su veicoli Ford®, Hyundai® e Kia®, sul nuovo transponder T80+.

AKTUALISIERUNG 2/2018

Die Informationen zur neuen Aktualisierung des SKP 2/2018 für alle WEB und DVD Abonnenten ist in der Sektion "Neuheiten" des Silca Key Programs verfügbar. Unter den Neuheiten:

- Ab der Version 04.06.091, RW4 Plus und Fastcopy Plus, kann das Gerät in Verbindung mit dem Modul M-BOX eine Kopie der Transponder TEX-80 Texas® Crypto 80 Bits auf dem neuen Transponder T80+ erstellen, die in Fahrzeugen der Marken Ford®, Hyundai® und Kia® verwendet werden.

MISE À JOUR 2/2018

Nouvelle mise à jour SKP 2/2018 pour tous les abonnés WEB et DVD disponible dans la section "Nouveautés" de Silca Key Programs. Parmi les nouveautés:

- A partir de version 04.06.091, le dispositif RW4 Plus et Fastcopy Plus, jumelé au module M-BOX, sont en mesure de faire la copie des transpondeurs TEX-80 Texas® Crypto 80 bits utilisés sur des véhicules Ford®, Hyundai® e Kia®, sur le nouveau transpondeur T80+.

ACTUALIZACIÓN 2/2018

Nueva actualización SKP 2/2018 para todos los abonados WEB y DVD disponible en la sección "Novedades" de Silca Key Programs. Entre las novedades:

- A partir de version 04.06.091, RW4 Plus e Fastcopy Plus, asociados al módulo M-BOX, ejecutan la copia de los transponders TEX-80 Texas® Crypto 80 bits, usados en los vehículos Ford®, Hyundai® y Kia®, en el nuevo transponder T80+.

ATUALIZAÇÃO 2/2018

Nova atualização SKP 2/2018 para todos o assinantes WEB e DVD disponível na seção "Novidades" de Silca Key Programs. Entre as novidades:

- A partir de versão 04.06.091, o dispositivos RW4 Plus e Fastcopy Plus, associados ao módulo M-BOX, pode executar a cópia dos transponders TEX-80 Texas® Crypto 80 bits utilizados em veículos Ford®, Hyundai® e Kia® no novo transponder T80+.

> More info on all Silca websites

Copyright by Silca S.p.A. 2018 - All Rights Reserved

SILCA CODE PROGRAM — SKP Vers. 21.9.x.xx

UC199

Unocode 299/399

Unocode 399 Evo

Unocode Pro

Data update with 26 new cutting cards / Aggiornamento dati con 26 nuove schede / Datenaktualisierung mit 26 neuen Karten / Mise à jour des données avec 26 nouvelles fiches / Actualización datos con 26 fichas nuevas / Atualização de dados com 26 fichas novas.

New items include / Tra le novità / Unter den Neuheiten / Parmi les nouveautés / Entre las novedades / Entre as novidades:

- **Abus® Titalium**
- **Balinglock®**
- **Burg®**
- **CIL IL®**
- **Corbin®** 405/20
- **Elzett®** 30/30
- **Era®** Fortress
- **Evva®**
- **Faab®**
- **Keyrack®**
- **Master®**
- **Mauer®** S1
- **Mila®**
- **Pundra®**
- **Titan®** K6TL (6P)
- **TSS®**
- **UAP®**

Update the software on / Aggiornare il software di / Aktualisierung der Software von / Mettre à jour le logiciel de / Actualizar el software de / Atualizar o software de: UC199, Unocode 299, Unocode 399, Unocode 399 Evo, Unocode Pro.

SILCA TRIAX - QUATTROCODE PROGRAM — SKP Vers. 21.9.x.xx

Quattrocode

Triax-e.code

Triax Quattro

Triax Pro

Data update with 16 new series / Aggiornamento dati con 16 nuove serie / Datenaktualisierung mit 16 neuen Serien / Mise à jour des données avec 16 nouvelles séries / Actualización datos con 16 nuevas series / Atualização de dados com 16 novas séries.

New items include / Tra le novità / Unter den Neuheiten / Parmi les nouveautés / Entre las novedades / Entre as novidades:

- **Abus®** Vela Pro
- **Aga®** R7 Leroy Merlin
- **Evva®** 4KS (2T)
- **Hyundai®** (2T-8W)
- **Mahindra®** (2T-8W)
- **M&C®** Color New

Update the software on / Aggiornare il software di / Aktualisierung der Software von / Mettre à jour le logiciel de / Actualizar el software de / Atualizar o software de: Triax e-code, Triax Quattro, Triax Pro.

SILCA VIPER PROGRAM — SKP Vers. 21.9.x.xx

Data update with 1 new cutting card / Aggiornamento dati con 1 nuova scheda / Datenaktualisierung mit 1 neue Karte / Mise à jour des données avec 1 nouvelle fiche / Actualización datos con 1 ficha nueva / Atualização de dados com 1 ficha nova.

New items include / Tra le novità / Unter den Neuheiten / Parmi les nouveautés / Entre las novedades / Entre as novidades:

- **Facea®** (2T-7W)

Update the software on / Aggiornare il software di / Aktualisierung der Software von / Mettre à jour le logiciel de / Actualizar el software de / Atualizar o software de: Viper.

® are registered trademarks. / sono marchi registrati. / sind eingetragene Marken. / sont des marques déposées. / son marcas registradas. / são marcas registradas.

Copyright by Silca S.p.A. 2018 - All Rights Reserved

SILCA TRANSPONDER PROGRAM — SKP Vers. 21.9.x.xx

RW4

Fast Copy

RW4 Plus

Fast Copy Plus

Silca Transponder Program has been updated with 76 new vehicle applications.

Das Silca Transponder Program wurde mit 76 neuen Auto-Applikationen aktualisiert.

Se ha actualizado el Silca Transponder Program con 76 nuevas aplicaciones vehículo.

Il Silca Transponder Program è stato aggiornato con 76 nuove applicazioni auto.

Silca Transponder Program a été mis à jour avec 76 nouvelles applications auto.

O Silca Transponder Program foi atualizado com 76 novas aplicações para automóvel.

New items include / Tra le novità / Unter den Neuheiten / Parmi les nouveautés / Entre las novedades / Entre as novidades:

Copy Transponder ID (6E-60) and (6E-63) Texas® Crypto 80 bits.
Starting from version 04.06.091, RW4 Plus and Fastcopy Plus devices, in combination with the M-BOX module, can copy TEX-80 Texas® Crypto 80 bit transponders used on Ford®, Hyundai® and Kia® vehicles, onto the new T80+ transponder.

Copia Transponder ID (6E-60) e (6E-63) Texas® Crypto 80 bits.
A partire dalla versione 04.06.091, i dispositivi RW4 Plus e Fastcopy Plus, in abbinamento al modulo M-BOX, sono in grado di eseguire la copia dei transponder TEX-80 Texas® Crypto 80 bits usati su veicoli Ford®, Hyundai® e Kia®, sul nuovo transponder T80+.

Transponder kopieren ID (6E-60) und (6E-63) Texas® Crypto 80 bits.
Ab der Version 04.06.091, RW4 Plus und Fastcopy Plus, kann das Gerät in Verbindung mit dem Modul M-BOX eine Kopie der Transponder TEX-80 Texas® Crypto 80 Bits auf dem neuen Transponder T80+ erstellen, die in Fahrzeugen der Marken Ford®, Hyundai® und Kia® verwendet werden.

Copie Transpondeur ID (6E-60) et (6E-63) Texas® Crypto 80 bits.
A partir de version 04.06.091, le dispositif RW4 Plus et Fastcopy Plus, jumelé au module M-BOX, sont en mesure de faire la copie des transpondeurs TEX-80 Texas® Crypto 80 bits utilisés sur des véhicules Ford®, Hyundai® e Kia®, sur le nouveau transpondeur T80+.

Copia Transponder ID (6E-60) y (6E-63) Texas® Crypto 80 bits.
A partir de version 04.06.091, RW4 Plus e Fastcopy Plus, asociados al módulo M-BOX, ejecutan la copia de los transponders TEX-80 Texas® Crypto 80 bits, usados en los vehículos Ford®, Hyundai® y Kia®, en el nuevo transponder T80+.

Cópia de Transponder ID (6E-60) e (6E-63) Texas® Crypto 80 bits.
A partir de versão 04.06.091, o dispositivos RW4 Plus e Fastcopy Plus, associados ao módulo M-BOX, pode executar a cópia dos transponders TEX-80 Texas® Crypto 80 bits utilizados em veículos Ford®, Hyundai® e Kia® no novo transponder T80+.

Update the software on / Aggiornare il software di / Aktualisierung der Software von / Mettre à jour le logiciel de / Actualizar el software de / Atualizar o software de: RW4, RW4 Plus, Fast Copy, Fast Copy Plus.

® are registered trademarks. / sono marchi registrati. / sind eingetragene Marken. / sont des marques déposées. / son marcas registradas. / são marcas registradas.

Copyright by Silca S.p.A. 2018 - All Rights Reserved

Free Software Update Fiat® 2016 ADS258 - Code D748071AD

May 2018

Advanced Diagnostics is pleased to announce the release of a **free update for Fiat® 2016 (ADS258) software for various makes and models. The previous software applications list has been expanded** to cover more vehicles. In addition to this, the new update includes precoding for aftermarket Fiat® remotes via the Smart Aerial or RW4 Plus/Fast Copy Plus.

Advanced Diagnostics ha sviluppato un nuovo **aggiornamento gratuito del software Fiat® 2016 (ADS258) per diverse marche e modelli auto. La lista applicazioni precedente è stata ampliata** per coprire ulteriori modelli veicolo. Inoltre, l'aggiornamento consente di precodificare i radiocomandi Fiat® non originali utilizzando Smart Aerial o RW4 Plus/Fast Copy Plus

Advanced Diagnostics hat ein neues **kostenloses Update der Software Fiat® 2016 (ADS258) für verschiedene Automarken und -modelle entwickelt. Die letzte Anwendungsliste wurde erweitert,** um noch mehr Fahrzeugmodelle abzudecken. Außerdem bietet das Update die Möglichkeit, Nicht-Original-Fiat®-Fernbedienungen unter Verwendung von Smart Aerial oder RW4 Plus/Fast Copy Plus vorzucodieren.

Advanced Diagnostics a développé une **nouvelle mise à jour gratuite du logiciel Fiat® 2016 (ADS258) pour différentes marques et différents modèles automobiles. La liste des applications précédente a été élargie** pour couvrir d'autres modèles de véhicules. La mise à jour permet en outre de précoder les télécommandes Fiat® non originales avec Smart Aerial ou RW4 Plus/Fast Copy Plus.

Advanced Diagnostics ha desarrollado una **nueva actualización gratis del software Fiat® 2016 (ADS258) para varias marcas y modelos de vehículo. La lista de aplicaciones precedente se ha ampliado** para comprender otros modelos de vehículo. Asimismo, la actualización permite precodificar los mandos Fiat® no originales usando Smart Aerial o RW4 Plus/Fast Copy Plus.

A Advanced Diagnostics desenvolveu uma **nova atualização gratuita do software Fiat® 2016 (ADS258) para várias marcas e modelos de veículo. A lista de aplicações anterior foi ampliada** para abranger mais modelos de veículo. Para além disso, a atualização permite pré-codificar os rádio controlos Fiat® não originais utilizando Smart Aerial ou RW4 Plus/Fast Copy Plus.

DETAILS OFFER	
Cable	ADC250 or ADC251
Dongle	Smart Dongle + Smart Aerial or RW4 Plus/Fast Copy Plus + ADC243 cable
Software category	A
Other software required	ADS185
Smart card	Smart Dongle

® All the brands and product names mentioned in this flyer are registered trademarks exclusive property of authorized manufacturers. Said trademarks or trade names are nominated only for the purposes of information in order to be rapidly identified. / All information and illustrations in this flyer are for guidance only. Silca reserves the right to alter products, software, designs or information to improve the product's quality.

Copyright by Silca S.p.A. 2018 - All Rights Reserved

ADS258 Software Applications

Fiat® 2016 ADS258

Europe

TABLE

			PIN	PIN	PRO				KEY REF.	REMOTE REF.
Alfa Romeo® Mito (Blade) 2008 to 2017	✓	✓	✓	✓	ADC250 or ADC251	Smart Dongle	✗	ID46	SIP22*	SIP22R01
Chrysler® Ypsilon (Blade) 2011 onwards	✓	✓	✓	✓	ADC250 or ADC251	Smart Dongle	✗	ID46	SIP22*	SIP22R01
Citroën® Nemo (Blade) 2007 to 2015	✓	✓	✓	✓	ADC250 or ADC251	Smart Dongle	✗	ID46	SIP22*	SIP22R01
Fiat® 500 / Abarth® (Blade) 2007 to 2018	✓	✓	✓	✓	ADC250 or ADC251	Smart Dongle	✗	ID46	SIP22*	SIP22R01
Fiat® Doblò (Blade) 2009 to 2015	✓	✓	✓	✓	ADC250 or ADC251	Smart Dongle	✗	ID46	SIP22*	SIP22R01
Fiat® Fiorino (Blade) 2008 onwards	✓	✓	✓	✓	ADC250 or ADC251	Smart Dongle	✗	ID46	SIP22*	SIP22R01
Fiat® Grande Punto (Blade) 2006 to 2016	✓	✓	✓	✓	ADC250 or ADC251	Smart Dongle	✗	ID46	SIP22*	SIP22R01
Fiat® Panda (Blade) 2011 onwards	✓	✓	✓	✓	ADC250 or ADC251	Smart Dongle	✗	ID46	SIP22*	SIP22R01
Fiat® Punto (Blade) 2012 to 2016	✓	✓	✓	✓	ADC250 or ADC251	Smart Dongle	✗	ID46	SIP22*	SIP22R01
Fiat® Qubo (Blade) 2008 to 2015	✓	✓	✓	✓	ADC250 or ADC251	Smart Dongle	✗	ID46	SIP22*	SIP22R01
Ford® Ka (Blade) 2008 to 2016	✓	✓	✓	✓	ADC250 or ADC251	Smart Dongle	✗	ID46	SIP22*	SIP22R01
Peugeot® Bipper (Blade) 2008 to 2015	✓	✓	✓	✓	ADC250 or ADC251	Smart Dongle	✗	ID46	SIP22*	SIP22R01
Vauxhall® Combo (Blade) 2012 onwards	✓	✓	✓	✓	ADC250 or ADC251	Smart Dongle	✗	ID46	SIP22*	SIP22R01

* Compatible key profile / Profilo chiave compatibile / Kompatibles Schlüsselprofil / Profil clé compatible / Perfil de llave compatible / Perfil de chave compatível

Important Note: To prevent damage to Smart Dongle, ensure that the ignition is turned off when connecting the programmer to the vehicle. / Nota importante: per prevenire eventuali danni al dispositivo Smart Dongle, assicurarsi che il motore sia spento nel momento in cui il dispositivo di programmazione viene collegato al veicolo. / Wichtige Information: Um Beschädigungen am Smart Dongle zu vermeiden, stellen Sie bitte sicher, dass die Zündung ausgeschaltet ist, wenn das Programmiergerät mit dem Fahrzeug verbunden wird. / Remarque importante: pour prévenir d'éventuels dégâts sur le dispositif Smart Dongle, assurez-vous que le moteur soit éteint au moment où le dispositif de programmation est connecté au véhicule. / Nota importante: para prevenir cualquier daño al Smart Dongle, asegúrese de que el contacto está apagado cuando conecte el dispositivo de programación al vehículo. / Anotação importante: para prevenir eventuais danos no dispositivo Smart Dongle, certificar-se de que o motor está desligado no momento em que o dispositivo de programação é ligado ao veículo.

® All the brands and product names mentioned in this flyer are registered trademarks exclusive property of authorized manufacturers. Said trademarks or trade names are nominated only for the purposes of information in order to be rapidly identified. / All information and illustrations in this flyer are for guidance only. Silca reserves the right to alter products, software, designs or information to improve the product's quality.

Copyright by Silca S.p.A. 2018 - All Rights Reserved

ADS258 Software Applications

Fiat® 2016 ADS258

Asia

TABLE

			PIN	PIN	PRO				KEY REF.	REMOTE REF.
Fiat® 500 / Abarth® (Blade) 2007 to 2018	✓	✓	✓	✓	ADC250 or ADC251	Smart Dongle	✗	ID46	SIP22*	SIP22R01

Middle East

TABLE

			PIN	PIN	PRO				KEY REF.	REMOTE REF.
Fiat® 500 / Abarth® (Blade) 2007 to 2018	✓	✓	✓	✓	ADC250 or ADC251	Smart Dongle	✗	ID46	SIP22*	SIP22R01

South America

TABLE

			PIN	PIN	PRO				KEY REF.	REMOTE REF.
Alfa Romeo® Mito (Blade) 2008 to 2015	✓	✓	✓	✓	ADC250 or ADC251	Smart Dongle	✗	ID46	SIP22*	SIP22R01
Citroën® Nemo (Blade) 2007 to 2015	✓	✓	✓	✓	ADC250 or ADC251	Smart Dongle	✗	ID46	SIP22*	SIP22R01
Fiat® 500 / Abarth® (Blade) 2007 to 2018	✓	✓	✓	✓	ADC250 or ADC251	Smart Dongle	✗	ID46	SIP22*	SIP22R01

* Compatible key profile / Profilo chiave compatibile / Kompatibles Schlüsselprofil / Profil clé compatible / Perfil de llave compatible / Perfil de chave compatível

Important Note: To prevent damage to Smart Dongle, ensure that the ignition is turned off when connecting the programmer to the vehicle. / Nota importante: per prevenire eventuali danni al dispositivo Smart Dongle, assicurarsi che il motore sia spento nel momento in cui il dispositivo di programmazione viene collegato al veicolo. / Wichtige Information: Um Beschädigungen am Smart Dongle zu vermeiden, stellen Sie bitte sicher, dass die Zündung ausgeschaltet ist, wenn das Programmiergerät mit dem Fahrzeug verbunden wird. / Remarque importante: pour prévenir d'éventuels dégâts sur le dispositif Smart Dongle, assurez-vous que le moteur soit éteint au moment où le dispositif de programmation est connecté au véhicule. / Nota importante: para prevenir cualquier daño al Smart Dongle, asegúrese de que el contacto está apagado cuando conecte el dispositivo de programación al vehículo. / Anotação importante: para prevenir eventuais danos no dispositivo Smart Dongle, certificar-se de que o motor está desligado no momento em que o dispositivo de programação é ligado ao veículo.

® All the brands and product names mentioned in this flyer are registered trademarks exclusive property of authorized manufacturers. Said trademarks or trade names are nominated only for the purposes of information in order to be rapidly identified. / All information and illustrations in this flyer are for guidance only. Silca reserves the right to alter products, software, designs or information to improve the product's quality.

Copyright by Silca S.p.A. 2018 - All Rights Reserved

Free Software Update Fiat® 2015 ADS231 - Code D746536AD

May 2018

Advanced Diagnostics is pleased to announce the release of a **free software update for Fiat® 2015 (ADS231) which now includes precoding for aftermarket Fiat® remotes via the Smart Aerial or RW4 Plus/Fast Copy Plus.** Customers that have not purchased the Smart Aerial have the option of using the Silca RW4 Plus/Fast Copy Plus and the ADC243 cable for precoding.

Advanced Diagnostics ha sviluppato **un nuovo aggiornamento gratuito del software Fiat® 2015 (ADS231) che consente di precodificare i radiocomandi Fiat® non originali utilizzando Smart Aerial o RW4 Plus/Fast Copy Plus.** I clienti che non hanno acquistato Smart Aerial possono utilizzare il dispositivo Silca RW4 Plus/Fast Copy Plus unitamente al cavo ADC243 per la precodifica.

Advanced Diagnostics hat ein neues **kostenloses Update der Software Fiat® 2015 (ADS231) entwickelt, das die Möglichkeit bietet, Nicht-Original-Fiat®-Fernbedienungen unter Verwendung von Smart Aerial oder RW4 Plus/Fast Copy Plus vorzucodieren.** Kunden, die kein Smart Aerial gekauft haben, können das Silca-Gerät RW4 Plus/Fast Copy Plus in Verbindung mit dem Kabel ADC243 für die Vorcodierung verwenden.

Advanced Diagnostics a développé une **nouvelle mise à jour gratuite du logiciel Fiat® 2015 (ADS231), qui permet de précoder les télécommandes Fiat® non originales avec Smart Aerial ou RW4 Plus/Fast Copy Plus.** Les clients qui ont acheté Smart Aerial peuvent utiliser le dispositif Silca RW4 Plus/Fast Copy Plus avec le câble ADC243 pour le précodage.

Advanced Diagnostics ha desarrollado una **nueva actualización gratis del software Fiat® 2015 (ADS231), que permite precodificar los mandos Fiat® no originales usando Smart Aerial o RW4 Plus/-Fast Copy Plus.** Los clientes, que no han comprado Smart Aerial, pueden usar el dispositivo Silca RW4 Plus/Fast Copy Plus junto al cable ADC243 para la precodificación.

A Advanced Diagnostics desenvolveu uma **nova atualização gratuita do software Fiat® 2015 (ADS231) que permite pré-codificar os rádio controlos Fiat® não originais utilizando Smart Aerial ou RW4 Plus/Fast Copy Plus.** Os clientes que não adquiriram Smart Aerial podem utilizar o dispositivo Silca RW4 Plus / Fast Copy Plus juntamente com o cabo ADC243 para a pré-codificação.

DETAILS OFFER	
Cable	ADC250 or ADC251
Dongle	Smart Dongle + Smart Aerial or RW4 Plus/Fast Copy Plus + ADC243 cable
Software category	C
Other software required	ADS185
Smart card	Smart Dongle

® All the brands and product names mentioned in this flyer are registered trademarks exclusive property of authorized manufacturers. Said trademarks or trade names are nominated only for the purposes of information in order to be rapidly identified. / All information and illustrations in this flyer are for guidance only. Silca reserves the right to alter products, software, designs or information to improve the product's quality.

www.silca.biz - www.silca-automotive.com - www.advanced-diagnostics.com

Copyright by Silca S.p.A. 2018 - All Rights Reserved

ADS231 Software Applications

Fiat® 2015 ADS231

TABLE

			PIN	PIN	PRO				KEY REF.	REMOTE REF.
Alfa Romeo® Giulietta (Blade) 2010 onwards	✓	✓	✓	✓	ADC250 or ADC251	Smart Dongle	✗	ID46	SIP22*	SIP22R07
Citroën® Jumper (Blade) 2011 to 2013	✓	✓	✓	✓	ADC250 or ADC251	Smart Dongle	✗	ID46	SIP22*	SIP22R07
Citroën® Relay (Blade) 2011 to 2013	✓	✓	✓	✓	ADC250 or ADC251	Smart Dongle	✗	ID46	SIP22*	SIP22R07
Fiat® 500L (Blade) 2012 onwards	✓	✓	✓	✓	ADC250 or ADC251	Smart Dongle	✗	ID46	SIP22*	SIP22R07
Fiat® Bravo (Blade) 2007 onwards	✓	✓	✓	✓	ADC250 or ADC251	Smart Dongle	✗	ID46	SIP22*	SIP22R07
Fiat® Ducato 3 (Blade) 2012 to 2013	✓	✓	✓	✓	ADC250 or ADC251	Smart Dongle	✗	ID46	SIP22*	SIP22R07
Iveco® Daily (Blade) 2012 onwards	✓	✓	✓	✓	ADC250 or ADC251	Smart Dongle	✗	ID46	SIP22*	SIP22R07
Peugeot® Boxer 3 (Blade) 2011 to 2013	✓	✓	✓	✓	ADC250 or ADC251	Smart Dongle	✗	ID46	SIP22*	SIP22R07

* Compatible key profile / Profilo chiave compatibile / Kompatibles Schlüsselprofil / Profil clé compatible / Perfil de llave compatible / Perfil de chave compatível

Important Note: To prevent damage to Smart Dongle, ensure that the ignition is turned off when connecting the programmer to the vehicle. / Nota importante: per prevenire eventuali danni al dispositivo Smart Dongle, assicurarsi che il motore sia spento nel momento in cui il dispositivo di programmazione viene collegato al veicolo. / Wichtige Information: Um Beschädigungen am Smart Dongle zu vermeiden, stellen Sie bitte sicher, dass die Zündung ausgeschaltet ist, wenn das Programmiergerät mit dem Fahrzeug verbunden wird. / Remarque importante: pour prévenir d'éventuels dégâts sur le dispositif Smart Dongle, assurez-vous que le moteur soit éteint au moment où le dispositif de programmation est connecté au véhicule. / Nota importante: para prevenir cualquier daño al Smart Dongle, asegúrese de que el contacto está apagado cuando conecte el dispositivo de programación al vehículo. / Anotação importante: para prevenir eventuais danos no dispositivo Smart Dongle, certificar-se de que o motor está desligado no momento em que o dispositivo de programação é ligado ao veículo.

® All the brands and product names mentioned in this flyer are registered trademarks exclusive property of authorized manufacturers. Said trademarks or trade names are nominated only for the purposes of information in order to be rapidly identified. / All information and illustrations in this flyer are for guidance only. Silca reserves the right to alter products, software, designs or information to improve the product's quality.

Copyright by Silca S.p.A. 2018 - All Rights Reserved

Accessories / Accessori / Zubehör / Accessoires / Accesorios / Acessórios

PER:

M&C (RO)

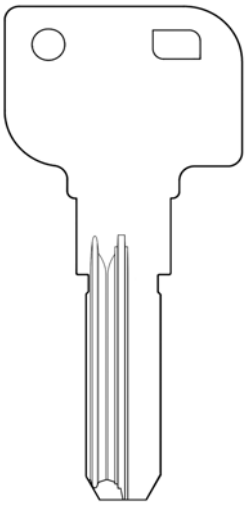

Color New

(3+3)

(2T-5W)

System protected by a password issued by Silca on receipt of authorization.

Sistema protetto da password rilasciata da Silca a fronte di autorizzazione.

Passwort geschütztes System - Freigabe des Herstellers erforderlich.

Système protégé par un password qui est émis par Silca sur autorisation.

Sistema protegido por password que expide Silca contra autorización.

Sistema protegido por uma password emitida por Silca contra a autorização.

SYSTEM	CARD	SN
Color New 3+3	4332	2000
Color New 2T-5W	4345	2001

TRIAX PRO

>SW 3.0.030

(3+3)

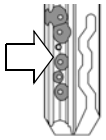

NEW

OPTIONAL CODE COPY

D751453ZB

95J Jaw
Ganascia 95J
95J Backe
Mâchoire 95J
Quijada 95J
Garra 95J

NEW

OPTIONAL CODE COPY

D751455ZB

96J Jaw
Ganascia 96J
96J Backe
Mâchoire 96J
Quijada 96J
Garra 96J

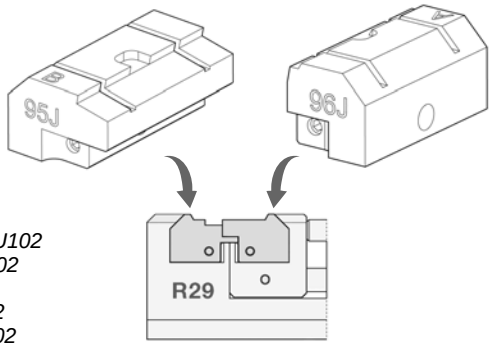

OPTIONAL

D908994ZR

Tracer point U102
Tastatore U102
Taster U102
Palpeur U102
Palpador U102
Palpador U102

OPTIONAL

D709115ZB

Cutter H103
Fresa H103
Fräser H103
Fraise H103
Fresa H103
Fresa H103

D709240ZB

Cutter W103
Fresa W103
Fräser W103
Fraise W103
Fresa W103
Fresa W103

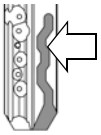

(2T-5W)

STANDARD CODE COPY

D943253ZR

01J Jaw
Ganascia 01J
01J Backe
Mâchoire 01J
Quijada 01J
Garra 01J

STANDARD CODE COPY

D943254ZR

02J Jaw
Ganascia 02J
02J Backe
Mâchoire 02J
Quijada 02J
Garra 02J

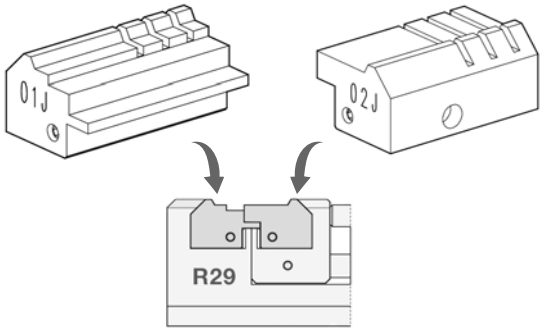

OPTIONAL

D709122ZB

Cutter H112
Fresa H112
Fräser H112
Fraise H112
Fresa H112
Fresa H112

D709249ZB

Cutter W112
Fresa W112
Fräser W112
Fraise W112
Fresa W112
Fresa W112

Copyright by Silca S.p.A. 2018 - All Rights Reserved

PER:

M&C (RO)

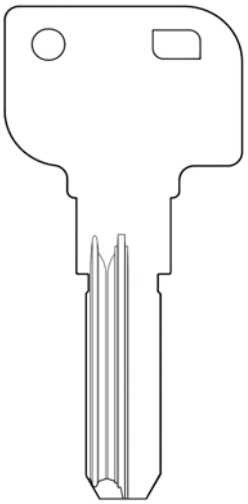

Color New

(3+3)

(2T-5W)

System protected by a password issued by Silca on receipt of authorization.

Sistema protetto da password rilasciata da Silca a fronte di autorizzazione.

Passwort geschütztes System - Freigabe des Herstellers erforderlich.

Système protégé par un password qui est émis par Silca sur autorisation.

Sistema protegido por password que expide Silca contra autorización.

Sistema protegido por uma password emitida por Silca contra a autorização.

SYSTEM	CARD	SN
Color New 3+3	4332	2000
Color New 2T-5W	4345	2001

TRIAX QUATTRO

>SW 1.4.067

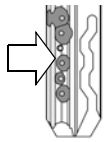

(3+3)

NEW

OPTIONAL **D751453ZB**

CODE

COPY

95J Jaw
Ganascia 95J
95J Backe
Mâchoire 95J
Quijada 95J
Garra 95J

NEW

OPTIONAL **D751455ZB**

CODE

COPY

96J Jaw
Ganascia 96J
96J Backe
Mâchoire 96J
Quijada 96J
Garra 96J

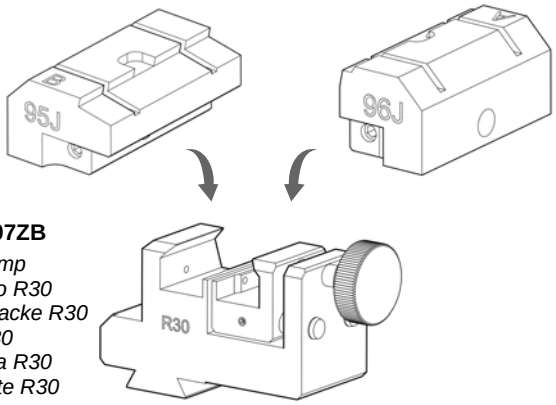

OPTIONAL **D746897ZB**

R30 clamp
Morsetto R30
Spannbacke R30
Etau R30
Mordaza R30
Mordente R30

OPTIONAL

D908994ZR

Tracer point U102
Tastatore U102
Taster U102
Palpeur U102
Palpador U102
Palpador U102

OPTIONAL

D709115ZB

Cutter H103
Fresa H103
Fräser H103
Fraise H103
Fresa H103
Fresa H103

D709240ZB

Cutter W103
Fresa W103
Fräser W103
Fraise W103
Fresa W103
Fresa W103

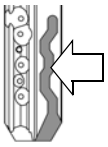

(2T-5W)

STANDARD

CODE

COPY

D917002ZR

R1 clamp
Morsetto R1
Spannbacke R1
Etau R1
Mordaza R1
Mordente R1

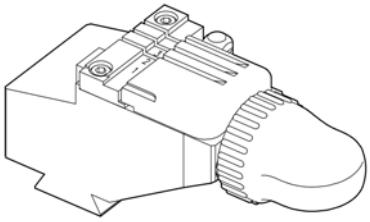

OPTIONAL

D709122ZB

Cutter H112
Fresa H112
Fräser H112
Fraise H112
Fresa H112
Fresa H112

D709249ZB

Cutter W112
Fresa W112
Fräser W112
Fraise W112
Fresa W112
Fresa W112

Copyright by Silca S.p.A. 2018 - All Rights Reserved

FOR:
PER:

ENGRAVING

FUTURA PRO
> SW 3.8.0

FUTURA
> SW 3.6.0

OPTIONAL	STANDARD
FUTURA PRO FUTURA	FUTURA PRO ENGRAVING

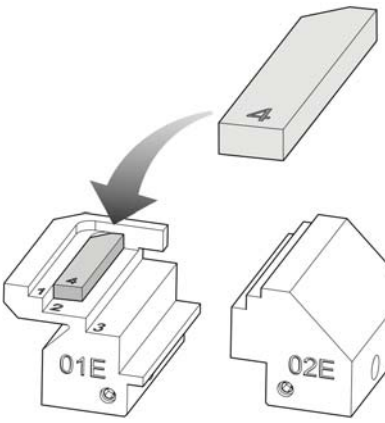

NEW

D750763ZB
Adapter plane 4
Adattatore sede 4
Adapter Ebene 4
Adaptateur emplacement 4
Adaptador alojamiento 4
Adaptador alojamento 4

D748737ZB
01E Jaw
Ganascia 01E
01E Backe
Mâchoire 01E
Quijada 01E
Garra 01E

D748739ZB
02E Jaw
Ganascia 02E
02E Backe
Mâchoire 02E
Quijada 02E
Garra 02E

D748741ZB
Cutter 18DW
Fresa 18DW
Fräser 18DW
Fraise 18DW
Fresa 18DW
Fresa 18DW

PLANE	WIDTH of the object to be engraved	ENGRAVING AREA (max.)
1	min 26 - max 32 mm	32 mm x 40 mm
2	min 20 - max 26 mm	24 mm x 36,5 mm
3	min 8 - max 14 mm	12 mm x 36,5 mm
4	**min 14 - max 20 mm**	**18 mm x 36,5 mm**

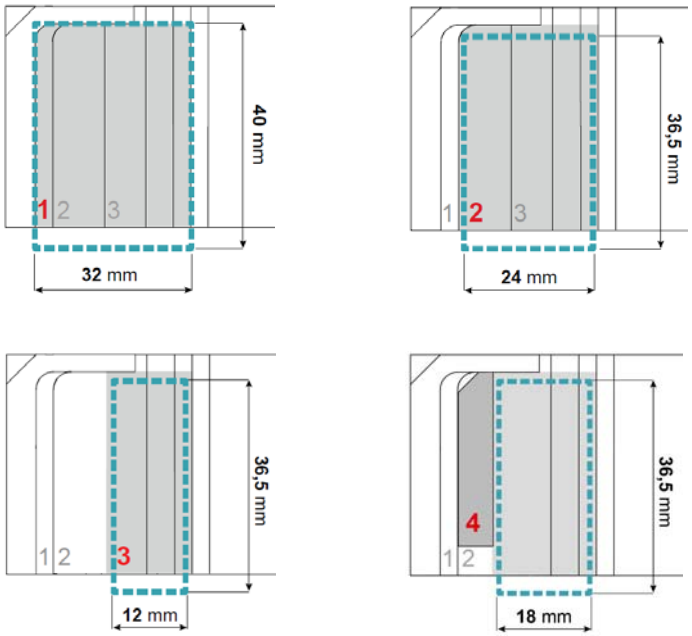

Copyright by Silca S.p.A. 2018 - All Rights Reserved